University of Toronto, Department of Electrical and Computer Engineering

ECE241F - Digital Systems - Lab 1

Introduction to Lab Equipment and Combinational Logic with TTL

Fall 1999 A. Carusone, P. Lehn, J. Rose

ATTACHMENT: Pin-out Diagrams for TTL Chips

1.0 Introduction to the Digital Lab

The purpose of this lab is to introduce you to some of the equipment in the digital lab that you'll be using all term, to build some basic combinational circuits, and to get handy with good practice of testing and debugging.

Below is a description of the different pieces of equipment you will use: the protoboard, logic probe, wire strippers and digital switch/light board.

1.1 Protoboard

The protoboard is for holding and connecting chips in an easy and simple way. As illustrated below, chips, pictured as , are inserted across the middle "valley" ( ) in the protoboard. The set of holes in a vertical line above the valley are connected electrically, as are the holes below the valley. Thus each pin of the chip in the board is connected to the holes above (or below) the pin. So, to make a connection between different pins, you need only make connections between the holes by plugging the bare end of a wire into the holes above or below the pins.

In the picture below, the horizontal lines at the top and bottom of the board delineate holes that are connected horizontally; note that the space in the middle indicates a disconnection. The horizontally connected holes at the tops and the vertially connected holes at the side are usually connected to the power and ground provided by the external connector. The power and ground of the chips are then connected to these strips of holes. The first thing you should do in the lab is connect power and ground to these horizontal and vertical strips.

1.2 Digital Switch Board

The digital switch board provides switches that have digital output (5V = logic 1, 0V = logic 0) and lights that can be driven by logic signals (logic 1 turns light on, logic 0 turns it off). Test the board by connecting the switches to the lights. These switches are "debounced", which means that for every physical transition of the switch, there is only one electrical change of its output. (without specific circuitry to make that happen, the electrical signal will "bounce" up and down many times for each physical transition of the switch).

The board also provides a clock, which can have its frequency varied by inserting different capacitors into the holes next to it, and a seven-segment LCD display.

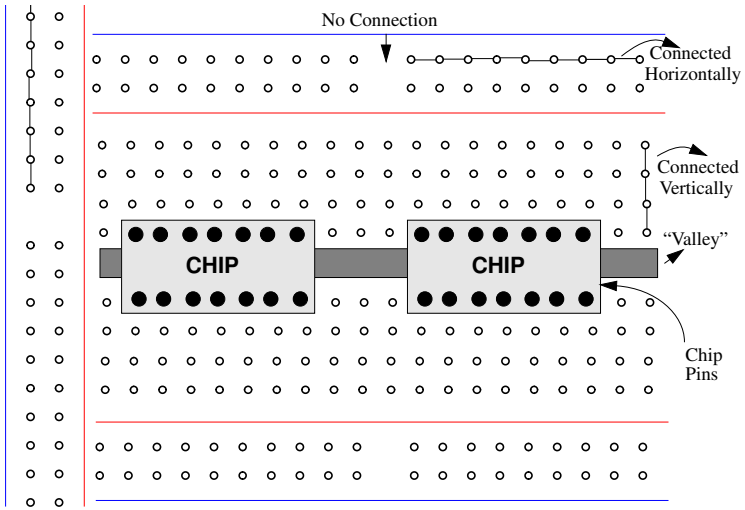

1.3 Logic Probe

The logic probe is used for measuring the logic values of signals on the board. Be sure that it has power attached, to the correct terminals. To test the probe, touch it to the +5V on the protoboard and ground, to ensure that it correctly indicates the values high (1) and low (0) respectively.

For this lab, since we'll be using TTL chips (see below in Section 1.5) you should set the switch to **TTL**; in other labs we'll be using CMOS chips, and so the switch setting should be changed.

The logic probe also can indicate when a signal is changed (oscillating). Touch the probe to the clock on the digital board to see how the probe indicates oscillation.

1.4 Wire Strippers and Chip Puller

The wire strippers are attached to each workstation to make sure they don't get lost. If you haven't ever stripped a wire, try it!

The chip puller should always be used to remove chips from the protoboard. Doing it with your fingers will bend the pins and ultimately break them, so don't!

1.5 TTL SSI Packages

The chips that you will use in this lab are Small Scale Integration (SSI - meaning not much

logic on a single chip) Transistor-Transistor Logic (TTL) family. TTL refers to the nature of the circuit of the digital logic gate; since we will only be using TTL this one time in the lab, and CMOS logic in the remainder of the lab, we won't bother describing the circuit. It is important to know, however, that the logic probe has a switch that must set appropriately for the different type of logic on it.

All of the TTL chips you will use are "Dual In-line Packages" or DIPs. Most of the packages are 14 pins, and the pins are number from looking at the chip from the top: Below the "notch" is pin 1 to pin 7, and above the notch is pin 14 down to 8. NOTE that Pin 14 must always be

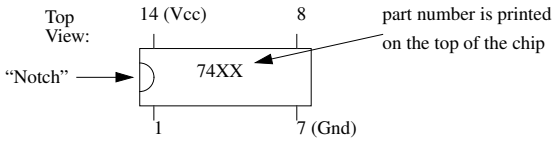

connected to VCC (+5V) and pin 7 to ground (0V).

2.0 Preparation

Design each of the circuits specified below using **only** 74LS04 (NOT), 74LS08 (AND) and 74LS32 (OR) series TTL gates, **as given on the attached sheets**. Choose the actual pin numbers of the chips that you will use when you build your circuit and show them on your circuit diagram - this will make the construction of your circuit easier.

In each case, show all of the steps required to go from the specification given below, to the final circuit, including: assigning variable names to inputs and outputs, deriving a truth table, the logic function, and then a schematic picture of the final circuit, with pin numbers and chip types.

Important: You are allowed to use **only** the following TTL packages (see sheet attached): 74LS04 (NOT gates), 74LS08 (AND gates) and 74LS32 (OR gates).

i. The logic function

$$f = \overline{ab} + c$$

ii. Design a circuit that has two inputs (**x** and **y**) and one output (**f**) that functions in the following way: the function **f** is true (1) when **x** and **y** are the same, and false (0) when they are different.

iii. Design a circuit with three inputs and two outputs (**f1** and **f2**). The first output (**f1**) should be true (1) whenever the number of 1's in the three inputs is either 1 or 3. The second output (**f2**) should be true (1) whenever the number of 1's in the three inputs is either 0 or 2. In all other cases, the outputs should be false (0).

Optional: using all of the TTL gates available, can you build a cheaper implementation (using fewer gates and/or wires)?

As part of your preparation, give an answer to the question in Section 3, part ii. below.

3.0 Lab

The purpose of this lab is to get familiar with the equipment *and* to build and test several combinational circuits, and get a sense of how to debug circuits that don't work.

3.1 Equipment Familiarization

Read through Section 1.0 of this handout, and test your equipment as indicated in that section. Make sure you know how all this stuff works; you will be using it heavily in this course, and we're likely to put questions about it on midterms and exams.

3.2 Building, Testing and Debugging Circuits

i. For each of the logic functions you designed in the preparation, build the circuit on the protoboard using TTL chips which are available in the lab. Use switches on the switch board as input and the lights as output. Remember to hook up the power!

   Show your teaching assistant that each circuit works correctly once it does.

ii. Once the final circuit is working, the teaching assistant will *break* your circuit by inserting a faulty wire or component or doing something nasty. You are required to determine what the cause of the non-function is. To do this you must show concrete proof of the cause. How do you do that?