University of Toronto, Department of Electrical and Computer Engineering

ECE241F - Digital Systems - Lab 7

Complex Finite State Machine, Modules and Handshaking

Fall 1999 A. Carusone, P. Lehn, J. Rose

1.0 Purpose

The purpose of this lab is to gain experience with state machines by building a much larger one that controls a small adder/subtracter unit. This lab amounts to building a very simple processor (computer). The lab also teaches about using pre-designed functional units *and* uses the handshaking technique developed in Lab #6 to properly synchronize communication between two devices.

Warning: this lab is difficult - be sure to allocate sufficient time for preparation. The good news is that you will learn a great deal in this lab.

2.0 Background

1. In Lab #5 you created a 3-bit D-type register (which was simply three D Flip-flops with the clock signals connected together), that also had a reset signal which set all of the flip-flops to zero when activated. Recall that a register with an **Enable** signal works in the following way: if the Enable = 1, then the register works as usual in response to the clock. If Enable = 0, then the outputs (Q_i) do not change in response to the clock.

2. The Altera maxplus2 software provides you with a number of pre-designed units, called the **Library of Parameterized Modules (LPM).** These consist of adders, adder/subtracters, multipliers, shift registers, decoders and more - basically everything you've been designing in this course, already done for you! The meaning of the word "parameterized" here is that you can specify many different things about the module. For example, you can call up an adder and specify that it should be a 10 bit adder, or a 20-bit adder. You can specify that a multi-bit D register has an enable signal (or not).

   To look at the different modules that are available, bring up the graphic editor in maxplus2 and double-click to bring up the **Enter Symbol** dialog box. Select the library that ends with "mega_lpm." The list of symbols that appear are the different modules. Scroll down the list and select the module **lpm_add_sub**. This is a module that will act either as an adder or a subtracter, depending on the value of a control signal.

   When you select the lpm_add_sub, a symbol appears on the graphic editor and at the same time a dialog box appears. This dialog box allows you to provide specifications of the type of adder/subtracter that you require. For example, to obtain a 3-bit adder/subtracter, select the parameter from the list at the bottom labelled "LPM_WIDTH" by double clicking on it. In the field next to "parameter value" type the value 3.

   To specify that you want this to be an adder/subtracter unit (as opposed to simply an adder), in the list at the top of the dialog box, select the name "add_sub" and click on the "used" button under Port Status. This creates a signal, attached to the adder, called **add_sub**, which when set to 1, causes the device to add its two inputs, and when set to 0, makes it subtract them. (Later in class, we will show a circuit that does this).

   To learn more about the various parameters of this module, click on the "HELP" button in the dialog box, use the main help menu, under MEGAFUNCTIONS/LPM.

   Click **OK** in the dialog box to create the adder/subtracter. You can modify your choices by double-clicking on the list of parameters that appear in the graphic editor.

3. Recall from lab #6, that to transmit data between two devices, it is often necessary to provide *handshaking* signals that ensure that the data is received correctly. This is particularly true when two devices are running at very different speeds. Consider the situation illustrated in Figure 1, in which **n** bits of data are to be transmitted from

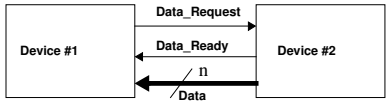

Figure 1 - *Handshaking*

   Device #2 to Device #1. When Device #1 requires new data, it raises the **Data_Request** line high (to "1"). Once #2 sees this and has placed the correct data on the n **Data** lines, it raises the **Data_Ready** line high. When #1 has taken the data (typically stored in a D-register) it lowers the **Data_Request** line after which #2 lowers the **Data_Ready** line. Device #1 can only raise a new request *after* the **Data_Ready** line is lowered. This procedure is called a "full handshake" and ensures that the data is transferred correctly, even when the two devices are running at vastly different speeds.

   We will make use of this concept in this lab, because Device #1 will be a state machine running at 25 MHz, and device #2, will be **you**, (i.e. you will be providing both the data through switches, and the Data_Ready signal) and you run considerably slower than 25MHz. This is very similar to the machine you built in Lab #6.

3.0 Preparation

Note: all preparation schematics, VHDL code and simulation output **MUST BE PRINTED** on paper for marking, before the lab begins.

1. Create a 3-bit D-type register symbol that has a **Reset** signal and an **Enable** signal as described above (either by creating your own symbol from basic DFFs or by using module lpm_DFF). Simulate your register to be sure that you understand how the Enable works.

2. Create a 3-bit **unsigned** adder/subtracter LPM unit in the graphic editor, (with an add_sub control signal) as described in part 2 of the background. Simulate the unit to make sure that you understand how it works. It is easier to simulate if you keep the 3-bit inputs grouped together as a bus, and in the waveform editor, specify these values as a group.

3. Build the circuit of Figure 2 in the graphic editor. Simulate the use of this circuit to add two numbers, applied one at a time through the input A, similar to Lab #5.

4. Using the circuit of Figure 2, simulate the subtraction of two numbers. (Setting add_sub = 0 makes this unit a subtracter).

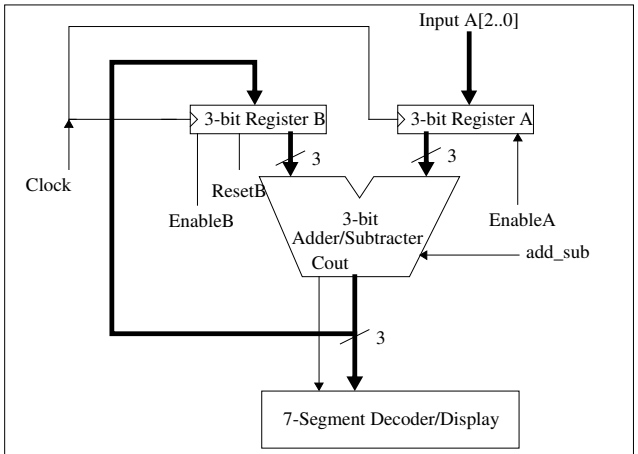

Figure 2 - *Processor DataPath*

5. You are to design a finite state machine that controls the circuit of Figure 2, and interacts with you as the user. The clock signal (for both the finite state machine *and* the Registers A and B) will be connected to the 25MHz (period 40ns) clock signal that is generated on the Altera board, and appears at pin #83 of the MAX 7128 (the global clock input).

   The outputs of the finite state machine (illustrated in Figure 3) are:

   i. EnableA - the enable signal for register A. When this is turned on, register A will, on the next positive edge of the clock, copy the input data A[2..0], coming from user switches into register A.

   ii. EnableB - the enable signal for register B. When this is turned on, register B will, on the next positive edge of the clock, copy the output of the adder/subtracter into register B.

   iii. ResetB - an active low signal which should set the contents of register B to zero. Make this a **synchronous** reset.

   iv. Request_Data - is an output (to be hooked up to a light on the digital switch board) which will signal to you that the machine wants you to input data.

   v. add_sub - is connected to the add_sub signal of the adder/subtracter, to tell it which function to perform. (=1 means add, =0 means subtract)

   The inputs of the finite state machine are:

   i. GO - active low (i.e. active when signal = 0). When activated, this causes the machine to begin operation, as described below.

   ii. Function - this is an input from the user which indicates the "instruction" that is desired. Function = 1 means that the two numbers should be added. Function =0 means that the two numbers should be subtracted.

   iii. Data_Ready - this signal should be connected to a switch on the switch board. It is the other part (with Request_Data) of the handshake between you and the state machine. Once the data is ready, you raise the Data_Ready signal. Once the Request_Data signal is lowered, you must lower the Data_Ready signal.

   When the GO signal is activated, your machine should request two pieces of 3-bit data from the user (one at a time) and either add or subtract them, depending on the **Function** input. To obtain the two pieces of data, you must use the handshaking protocol described above in the background section. **Code your Finite state machine in VHDL.** Turn it into a symbol and connect it to the circuit of Figure 2 using the graphic editor.

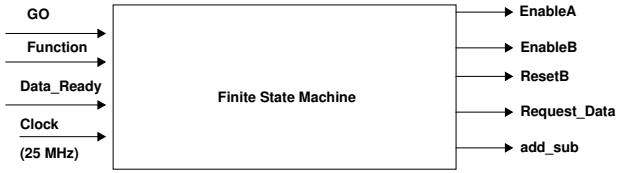

Figure 3 - *The Finite State Machine*

4.0 In the Lab

Build and test the circuit of part 5 of the preparation. Make sure that *all* of the clock signals on flip flops and the state machine are connected to the 25MHz clock (pin 83 of the 7128).